SAKE ROBOTICS

EZGripper Gen1 and Gen2 Robotic Gripper

Electrical Connections Guide

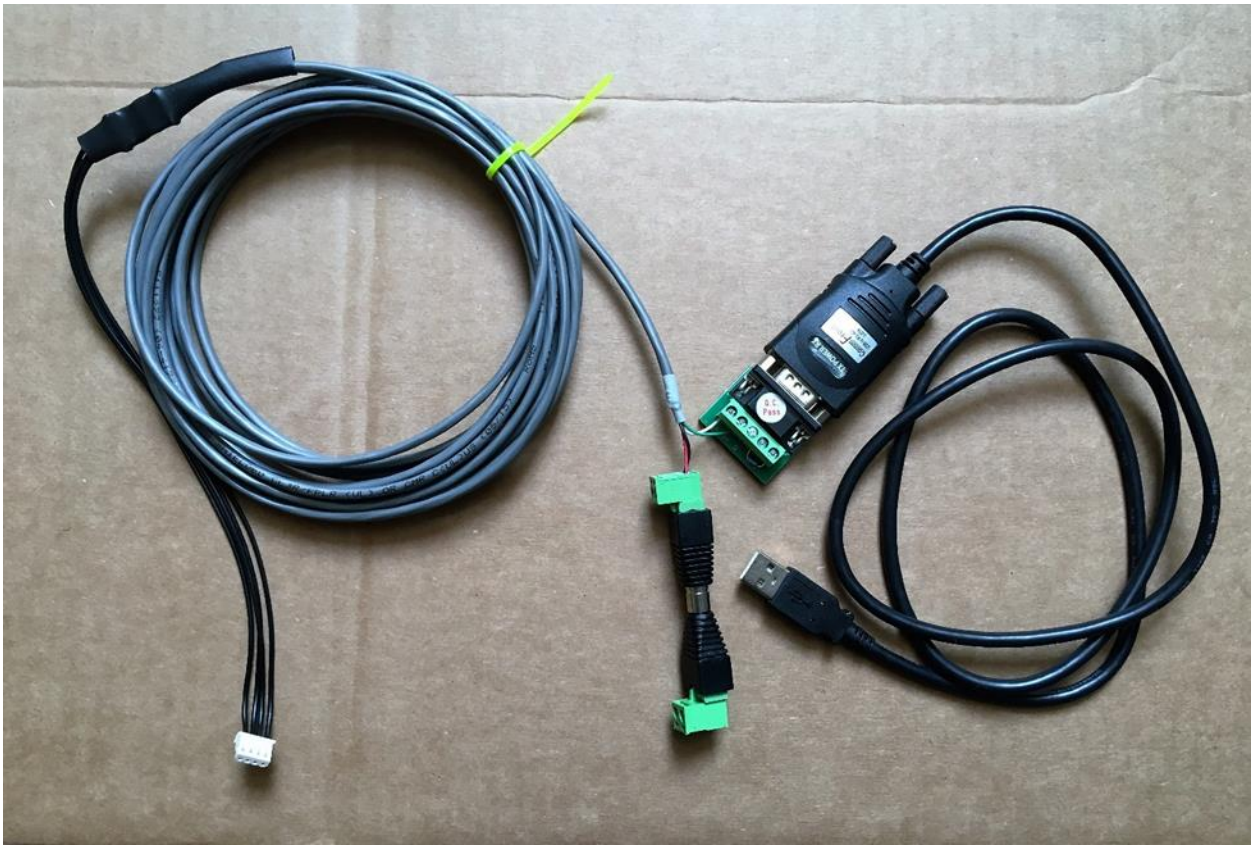

This guide shows how to electrically attach the EZGripper robotic grippers to robots, but does not discuss the mounting connections or control of the gripper.

Overview

It is easy to hook up the EZGripper to your computer and power. The cable setup is the same for EZGripper Gen1 and for Gen2.

The Control and Power cable for the EZGripper includes:

- USB to RS485 Cable with breakout header (with 120 ohm resistor installed)
- 5 Meter EZGripper servo cable
- 12V power injector 2.5mm X 5.5mm power male and female
- Molex 4 pin for servo connection

The USB goes to your controlling computer. The USB does not supply the power to the servo. The 12V servo power is provided by the power connector with 12V, 4A capable power supply.

Power Supply Specifications

12V DC, 4A

Servo Specification http://support.robotis.com/en/product/actuator/dynamixel/mx_series/mx-64.htm

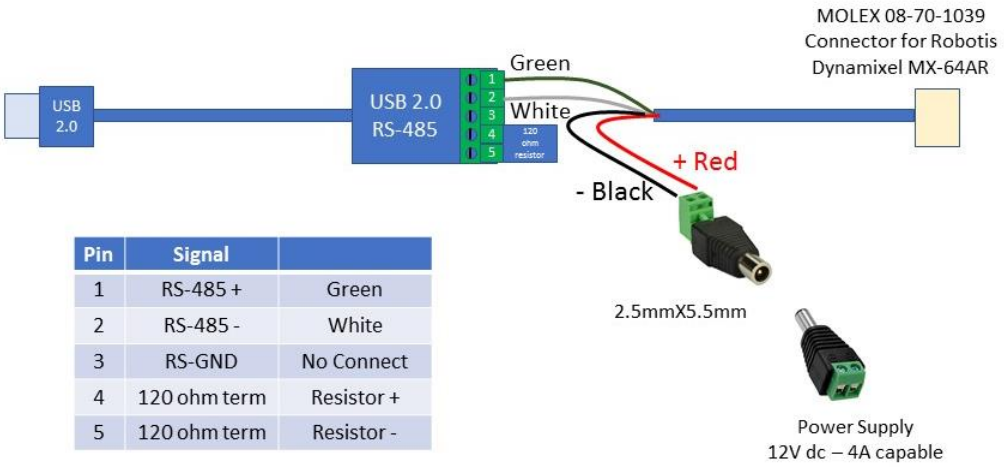

Pin	Signal	
1	RS-485 +	Green
2	RS-485 -	White
3	RS-GND	No Connect
4	120 ohm term	Resistor +
5	120 ohm term	Resistor -

Figure 1: Generic Cabling Diagram. Most USB to RS485 Interfaces Work With The EZGripper Servo

Figure 2: Closeup of RS485 Breakout Connection to EZGripper Servo Cable and Power Plugs

	RX/EX/MX-Series (RS-485 Version)	
Connector Diagram	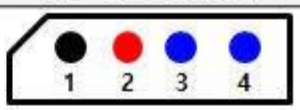	
Pin Assignment	1	GND
	2	VDD
	3	DATA +
	4	DATA -
Dynamixel		
Cable		
Connectors Specifications (		
PCB Header	MOLEX 22-03-5045	
Cable (Housing)	MOLEX 50-37-5043	
Cable (Terminal)	MOLEX 08-70-1039	

Figure 3: Dynamixel Servo Connector

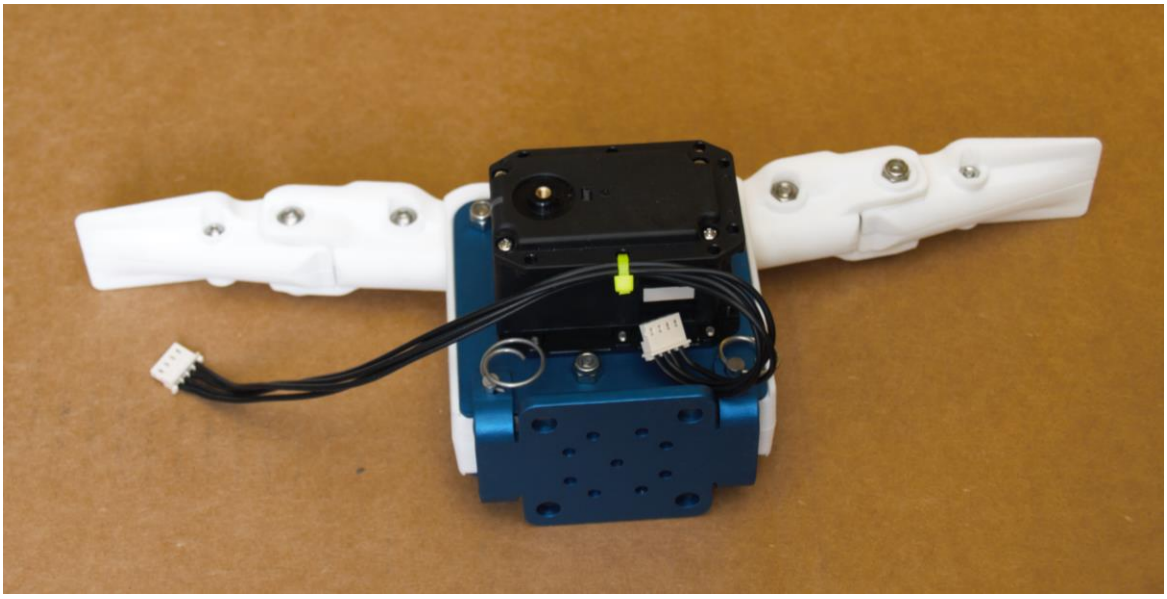

Figure 4: Unpluged EZGripper Cable with ZipTie to Prevent Stress on Connector

\

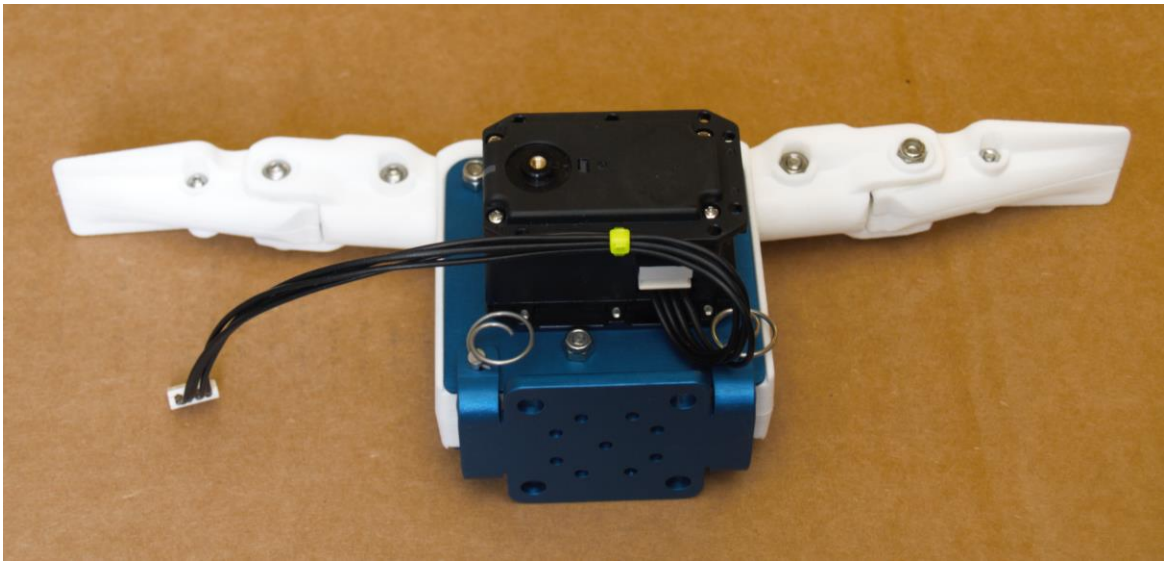

Figure 5: Plugged inEZGripper Cable with ZipTie to Prevent Stress on Connector